ERV • EK650L-Fi-EC-N

Light Commercial

600 CFM at 0.2 in.w.g

aldes
At the heart of buildings

MADE IN CANADA | EC | 5 YEARS WARRANTY Core | 2 YEARS WARRANTY Other Parts

Intertek | AHRI CERTIFIED

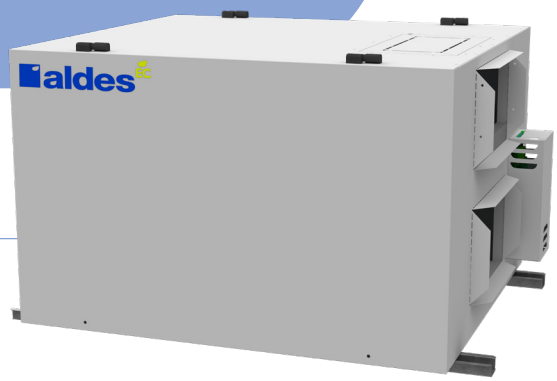

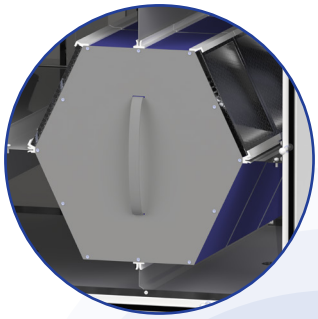

Polymeric membrane counter-flow ERV

PRODUCT DESCRIPTION

The EK650L-Fi-EC-N energy recovery ventilator delivers up to 600 CFM of fresh air. Featuring Aldes' AHRI Certified core for superior moisture transfer and high-efficiency, quiet variable-speed EC motors, it provides reliable performance and energy savings in any climate zone. The unit is designed for versatile indoor installation and easy maintenance.

TECHNICAL INFORMATION

Plate Exchanger
Material: Polymeric membrane counter-flow ERV

Casing (Standard)
Material: Painted galvanized steel 22GA
Insulation: 1"(25 mm) Fiberglass with FSK
Drain Connection: Ø 1/2" (Ø 13 mm)
Duct Connections: 14" x 8" (356 mm x 203 mm)
Width: 36-1/4" (921 mm)
Height: 23-7/8" (606 mm)
Depth: 32-1/8" (816mm
Weight: 140 lb. (64 kg);
150 lb. (68 kg) with recirculation
Shipping Weight: 205 lb. (93 kg);
215 lb. (93 kg) with recirculation

Mounting
Supplied with base rails. Support rods not included

Electrical Requirements
230V/1p/60Hz: FLA 2.8A, MCA 3.2A, MOP 15A
208V/1p/60Hz (with field modification):
FLA 3.0A, MCA 3.4A, MOP 15A
Terminal block for direct wiring to the building's electrical system. Fused disconnect not included

Filters
Aluminium filters (standard) (No. 300607029)
Optional MERV 8 (No. 300607050)
and MERV 13 filters available (No. 300607044)

Blowers
Two backward-inclined motorized impeller, direct-drive, EC motors, variable speed, external rotor

Frost Control
Cycles controlled by a temperature sensor when outdoor temperatures fall below 14°F (-10°C)
- Standard: Exhaust Defrost
- Optional: Recirculation Defrost (No. 300210900)

Sound data available on request

WALL CONTROLS

Low-voltage dry contact (24 VAC) to synchronize with the heating/cooling system. For more details, refer to the wall control spec sheets.

BACnet™ Interface
(No. 300220235)

Digital Multifunction Control
(No. 200500242_FC)

LCD Electronic Multifunction Control
(No. 200500227)

20/40/60 Minute timer
(No. 200500228)

Speed control
(low/intermittent/high)
(No. 200500229)

Mode Control
(recirculation)
(No. 200500230)

Electrical Coil (optional)

An optional electrical coil is available for post heating. The electrical heater has its own power connection with a fused disconnect included. Can be paired with the light commercial units for optimized control. The electrical heater is self managed with an included thermistor.

No.	Power	Dimensions (in.)			Minimum airflow (CFM)	VAC-Ph	Current (A)
		W	H	D			
300200001	4 kW	10	8	6	167	240-1	16.67
300200002	8 kW	14	8	7	233	240-1	33.33
300200003	10 kW	20	8	6	333	240-1	41.67
300200004	12 kW	24	8	6	400	240-1	50.00

Power	Avalability			
	H/E/HK/EK 400	H/E/HK/EK 650	H/E/HK/EK 1100	H/E//EK 1800
4 kW	•	•	•	•
8 kW		•	•	•
10 kW			•	•
12 kW				•

DIMENSIONS

FRONT VIEW

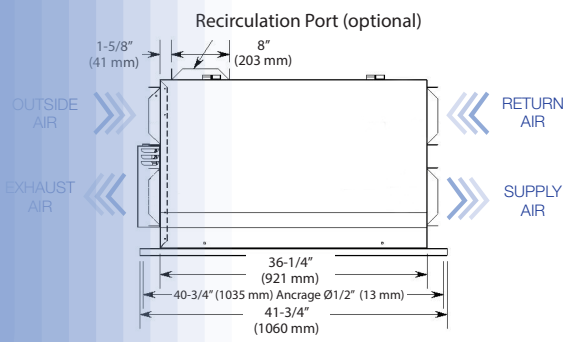

SIDE VIEW

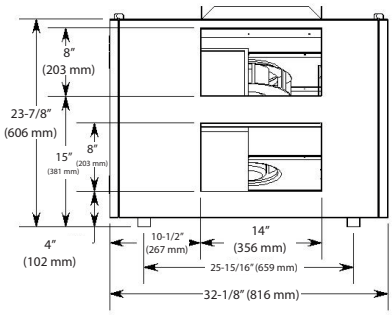

BOTTOM VIEW

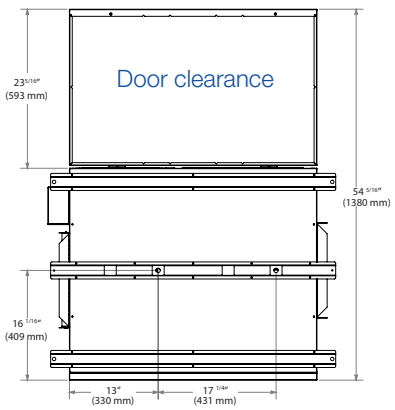

PERFORMANCE

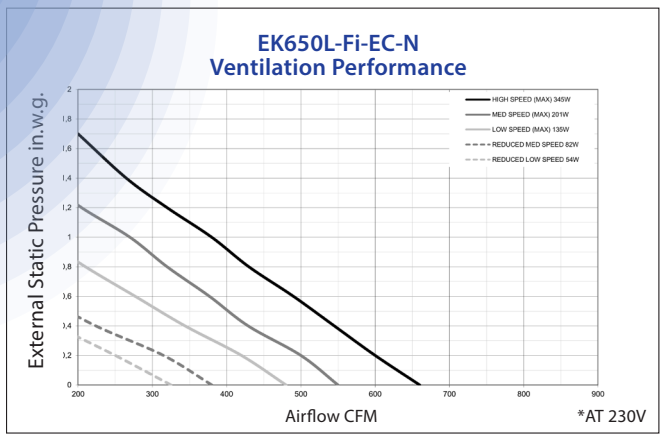

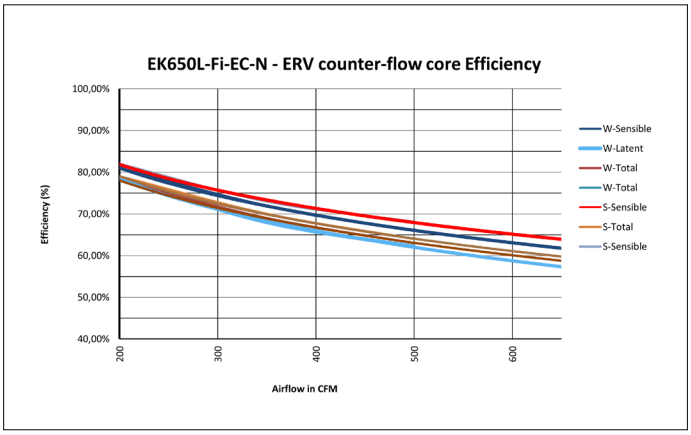

YOUR PROJECT :	
Location :	
Model # :	
Quantity :	
Submitted By :	
Date :	

Architect :	
Engineer :	
Contractor :	
Comments :	

For more information, contact your Aldes sales advisor, visit aldes-na.com, call 1.800.255.7749 or find us on

Aldes-FicheTech-EK650L-Fi-EC-N_Angl
Aldes reserves the right to make any modifications to its products in line with technological advancements.
Images are for illustrative purposes only. Photo credits: Adobe Stock / Aldes Group.

©2026 Aldes North America – All rights reserved. Any reproduction or distribution of this document, in whole or in part, in any form or by any means, is prohibited without the prior written consent of Aldes North America. The information contained in this document is subject to change without notice.
Aldes North America: USA 800-255-7749 | CAN 800-262-0916